SILVER FOX 4wd

1/8 SCALE
RADIO CONTROL
OFF ROAD RACING BUGGY
19-21 ENGINE
2 CHANNEL RADIO

四輪驅動 銀狐 越野沙灘車

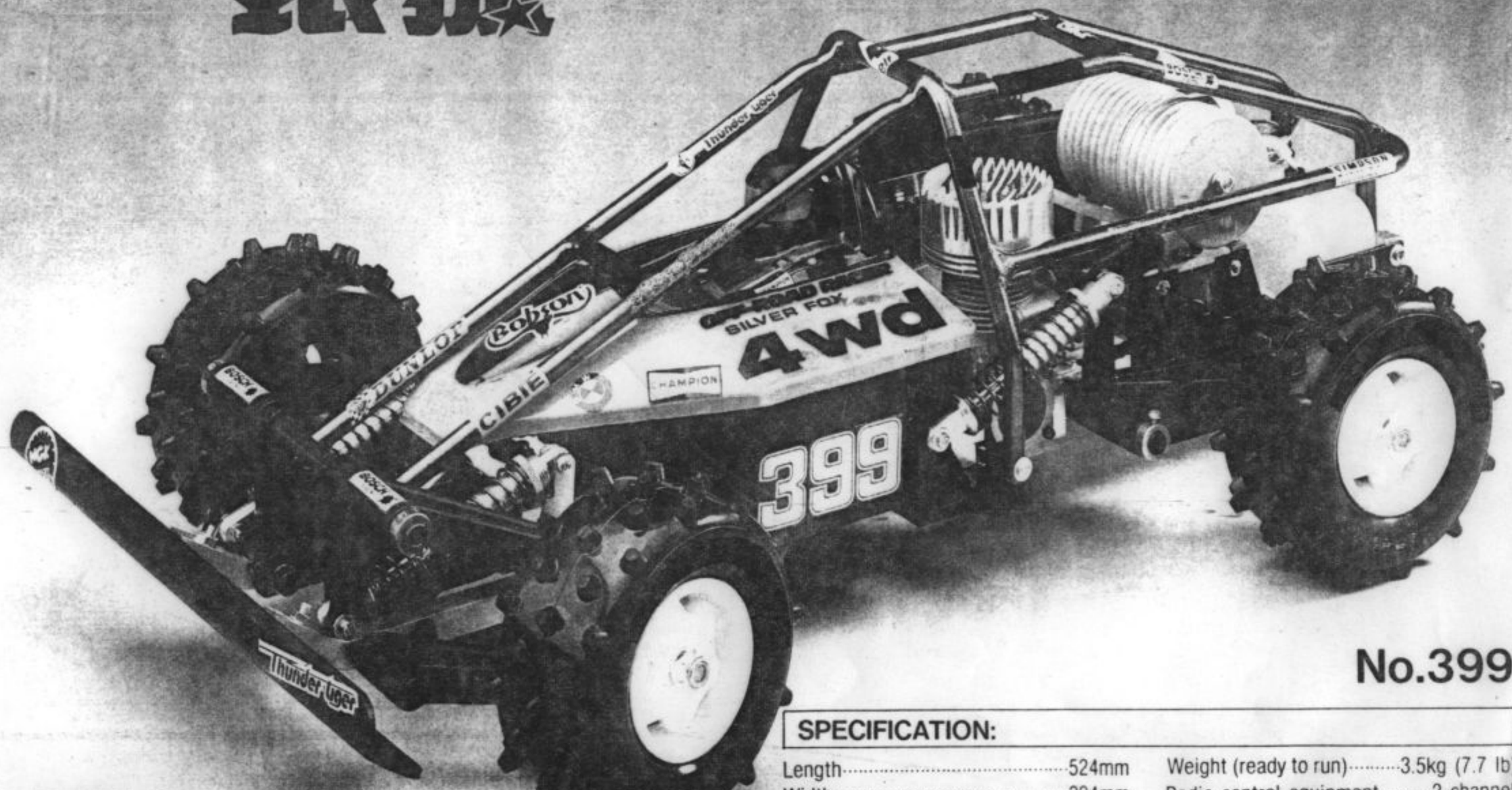

No.399

SPECIFICATION:

Length	524mm	Weight (ready to run)	3.5kg (7.7 lb)
Width	294mm	Radio control equipment	2-channel
Height	187mm	Engine	.21 cubic incn (3.5cc)
Wheelbase	315mm		

Thunder tiger
THE MOST RELIABLE RADIO CONTROL MODELS

Thank you for your purchase! Carefully read instruction before assembling this model

[illegible]

OTHER EQUIPMENT REQUIRED 套件之外必需之裝備

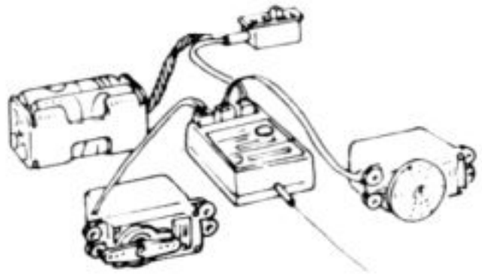

SERVO, RECEIVER AND SWITCH

[illegible]

2CH TRANSMITTER

[illegible]

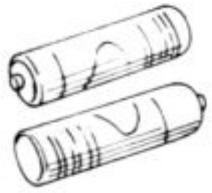

TRANSMITTER 6 [illegible] 3 DRY CELL

RECEIVER 4 [illegible] 3 DRY CELL

發訊機 [illegible]

收訊機 [illegible]

SLOW PLUG

[illegible]

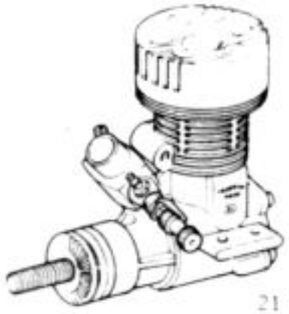

21 FSR ABC CAR

[illegible] ENGINE

No 981

TOOLS REQUIRED FOR ASSEMBLING 組合前必要的工具

OPEN END WRENCH

[illegible]

OPEN END WRENCH

[illegible]

CROSS HEAD SCREW DRIVER

十字起子

ALLIGATOR PLIER

[illegible]

FILE

[illegible]

SCISSORS

[illegible]

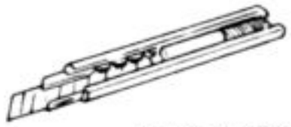

BLADE CUTTER

[illegible]

SAND PAPER

[illegible]

SCOTCH TAPE

膠帶

α CYANOACRYLATE ADHESIVE

[illegible]

PAINT

[illegible]

BRUSHES

[illegible]

ARTICLES REQUIRED FOR RUNNING 行車前必要的物件

No 617
1.5V BATTERY
1.5V電池

No 173/2
LOCKING SOCKET
套筒式電夾

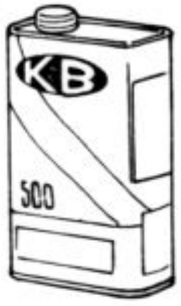

(K & B #500) FUEL
燃料

No 104
FUEL PRIMER BOTTLE
注油器

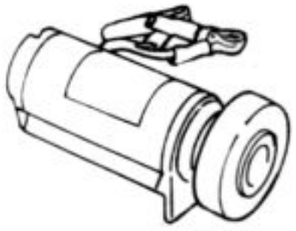

No 670
STARTER
起動器

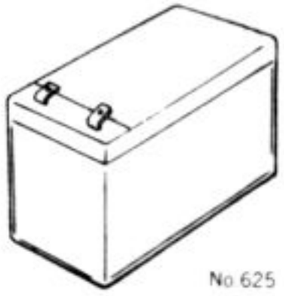

No 625
12V. 6A SEAL BATTERY
12V. 6A電池

SYMBOL FOR INSTRUCTION 代號說明

ANAEROBIC ADHESIVE

螺絲防鬆劑

GREASE

潤滑油脂

● Apply the adhesive or grease as the symbol indication on picture

依照代號指示，局部塗以防鬆劑或油脂

SCREW DESIGNATION 螺絲名稱

"M3 × 25"

OUSIDE DIAMETER 外徑

EFFECTIVE LENGTH 有效長度

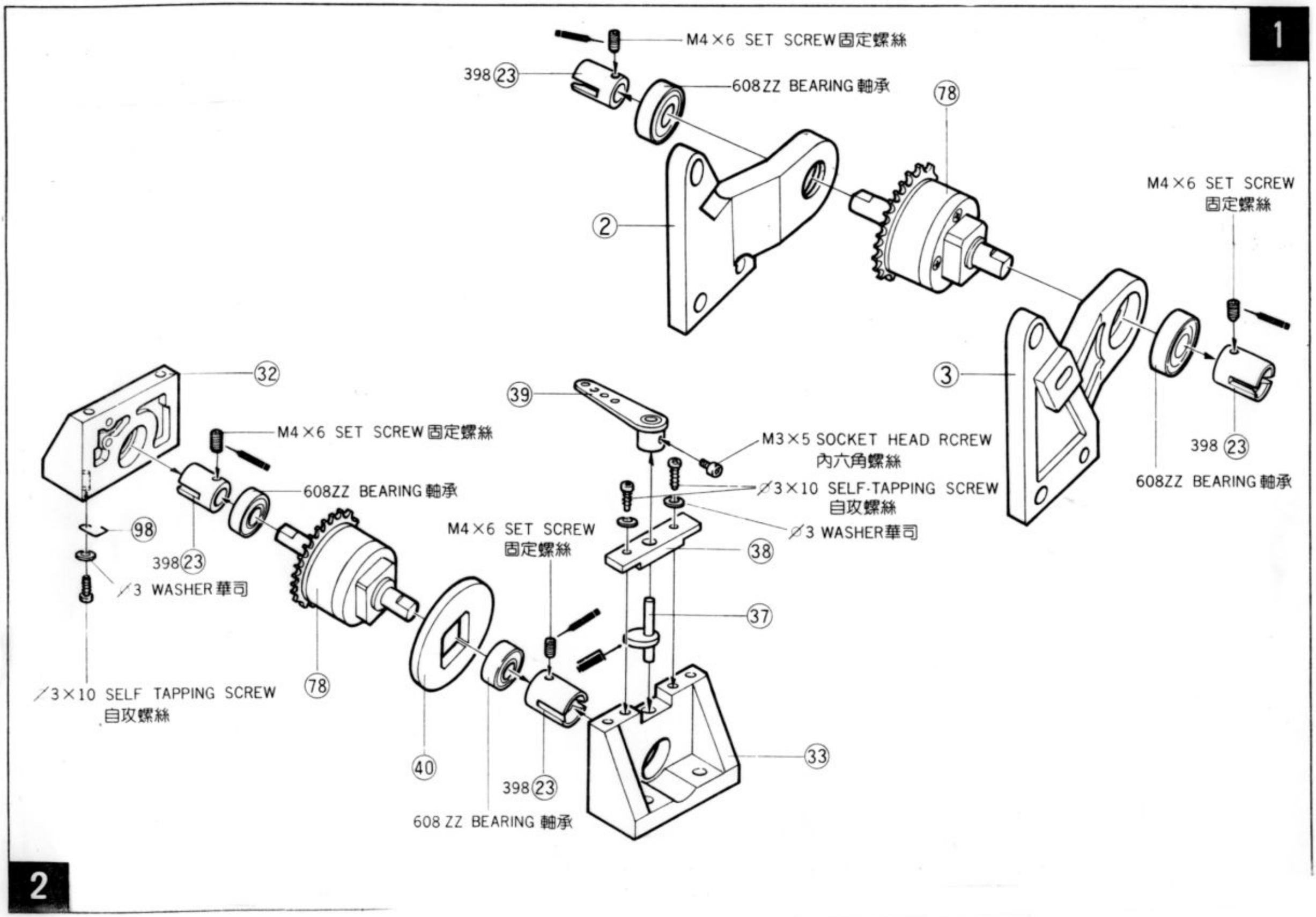
M4×6 SET SCREW固定螺絲
398 23
608ZZ BEARING 軸承
78
2
M4×6 SET SCREW
固定螺絲
3
398 23
608ZZ BEARING 軸承
32
39
M4×6 SET SCREW固定螺絲
608ZZ BEARING 軸承
M3×5 SOCKET HEAD RCREW
內六角螺絲
⌀3×10 SELF-TAPPING SCREW
自攻螺絲
⌀3 WASHER華司
98
398 23
⌀3 WASHER華司
M4×6 SET SCREW
固定螺絲
38
37
⌀3×10 SELF TAPPING SCREW
自攻螺絲
78
40
398 23
608 ZZ BEARING 軸承
33

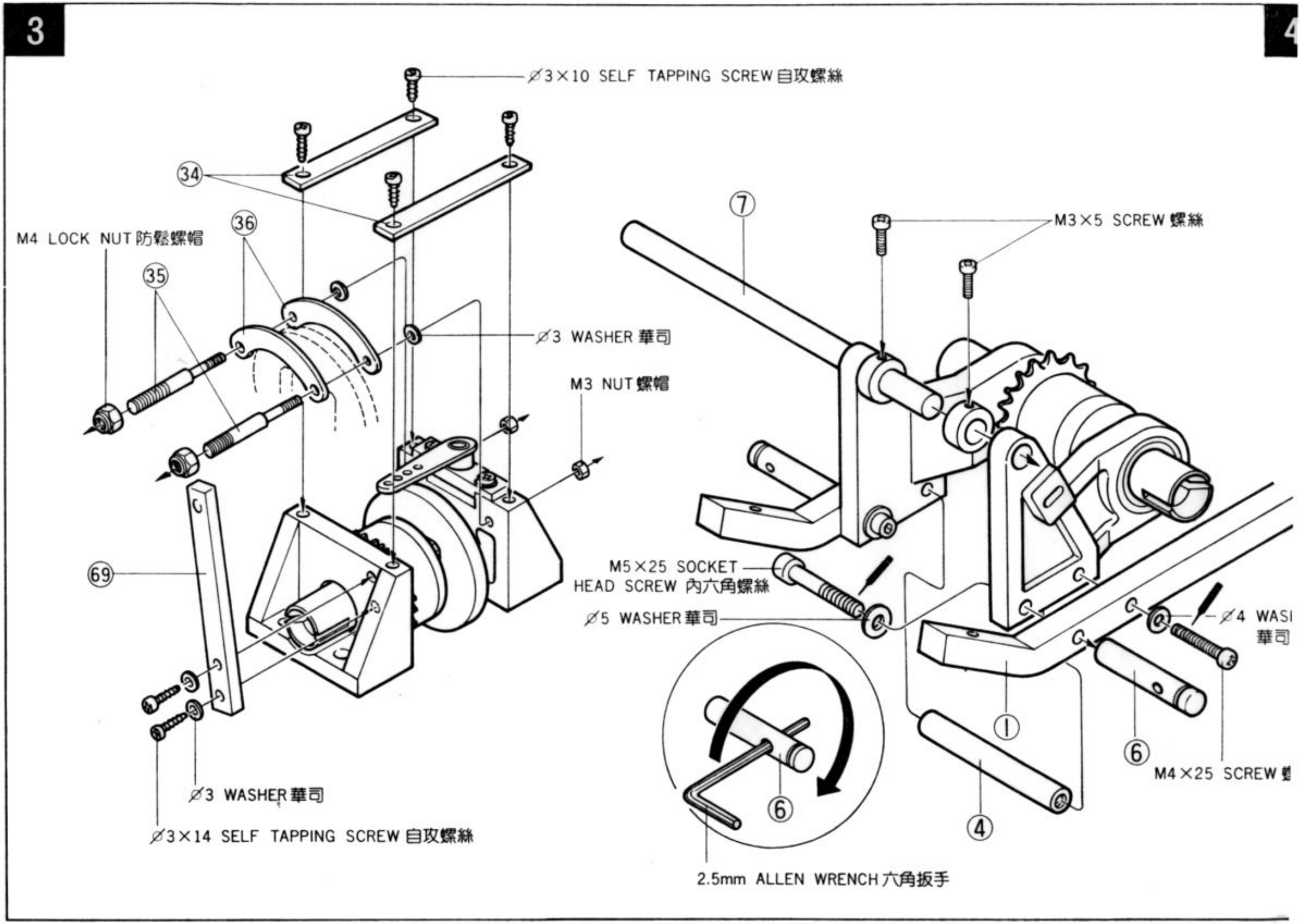
∅3×10 SELF TAPPING SCREW 自攻螺絲
34
36
M4 LOCK NUT 防鬆螺帽
35
∅3 WASHER 華司
M3 NUT 螺帽
69
∅3 WASHER 華司
∅3×14 SELF TAPPING SCREW 自攻螺絲
7
M3×5 SCREW 螺絲
M5×25 SOCKET HEAD SCREW 內六角螺絲
∅5 WASHER 華司
∅4 WASI
華司
1
6
M4×25 SCREW
4
6
2.5mm ALLEN WRENCH 六角扳手

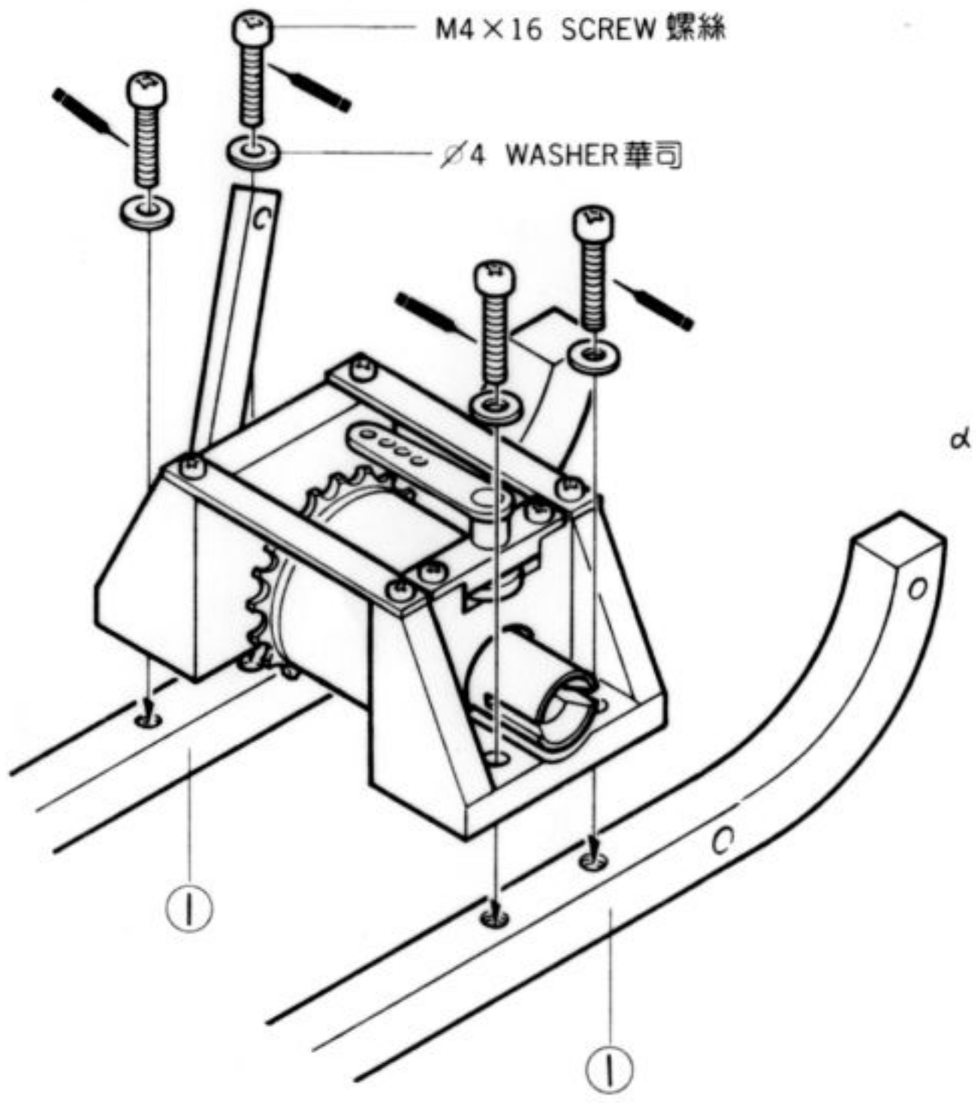
M4×16 SCREW 螺絲
∅4 WASHER 華司
①
①

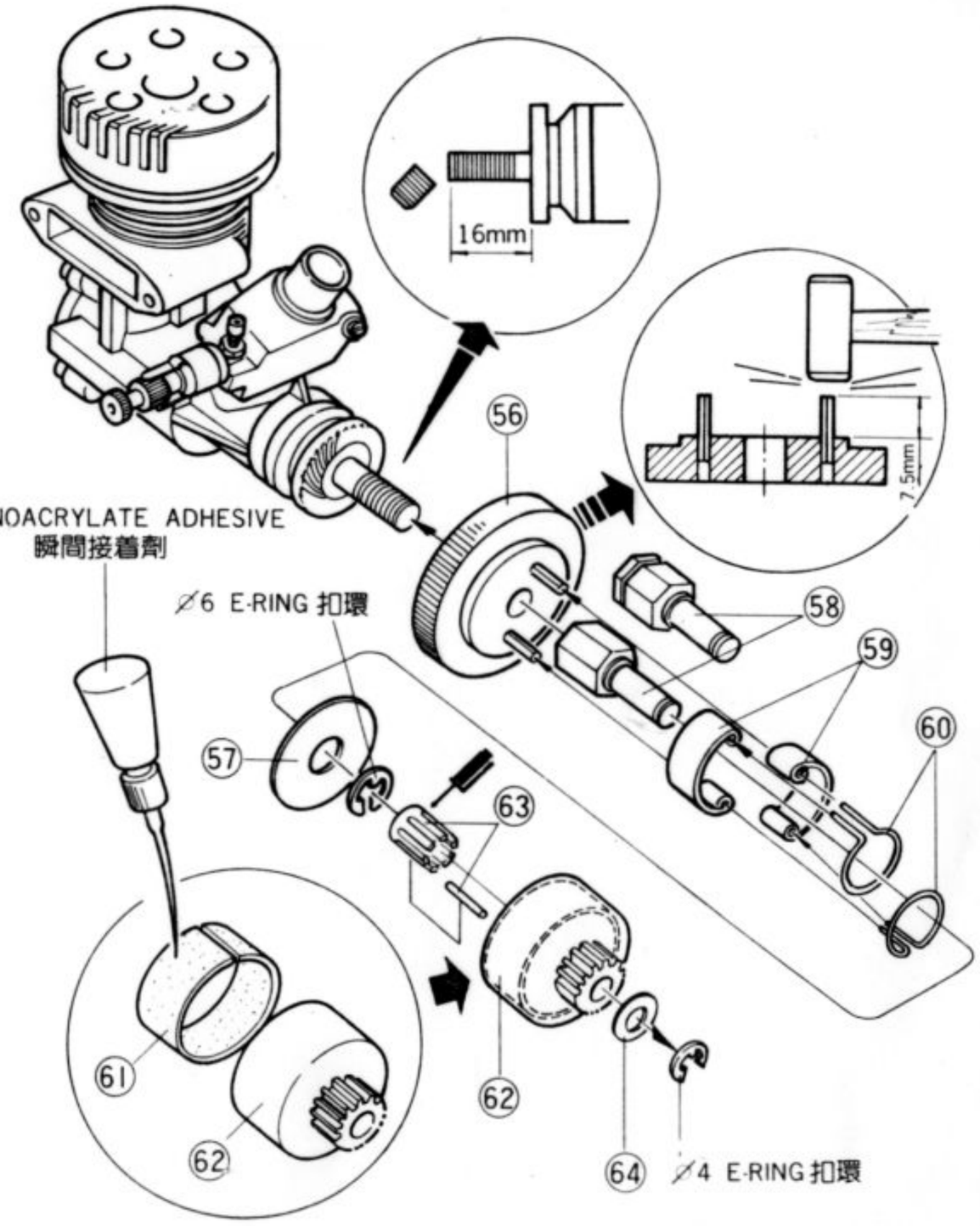
16mm
7.5mm
56
α-CYANOACRYLATE ADHESIVE
瞬間接着劑
∅6 E-RING 扣環
58
59
60
57
63
61
62
62
64
∅4 E-RING 扣環

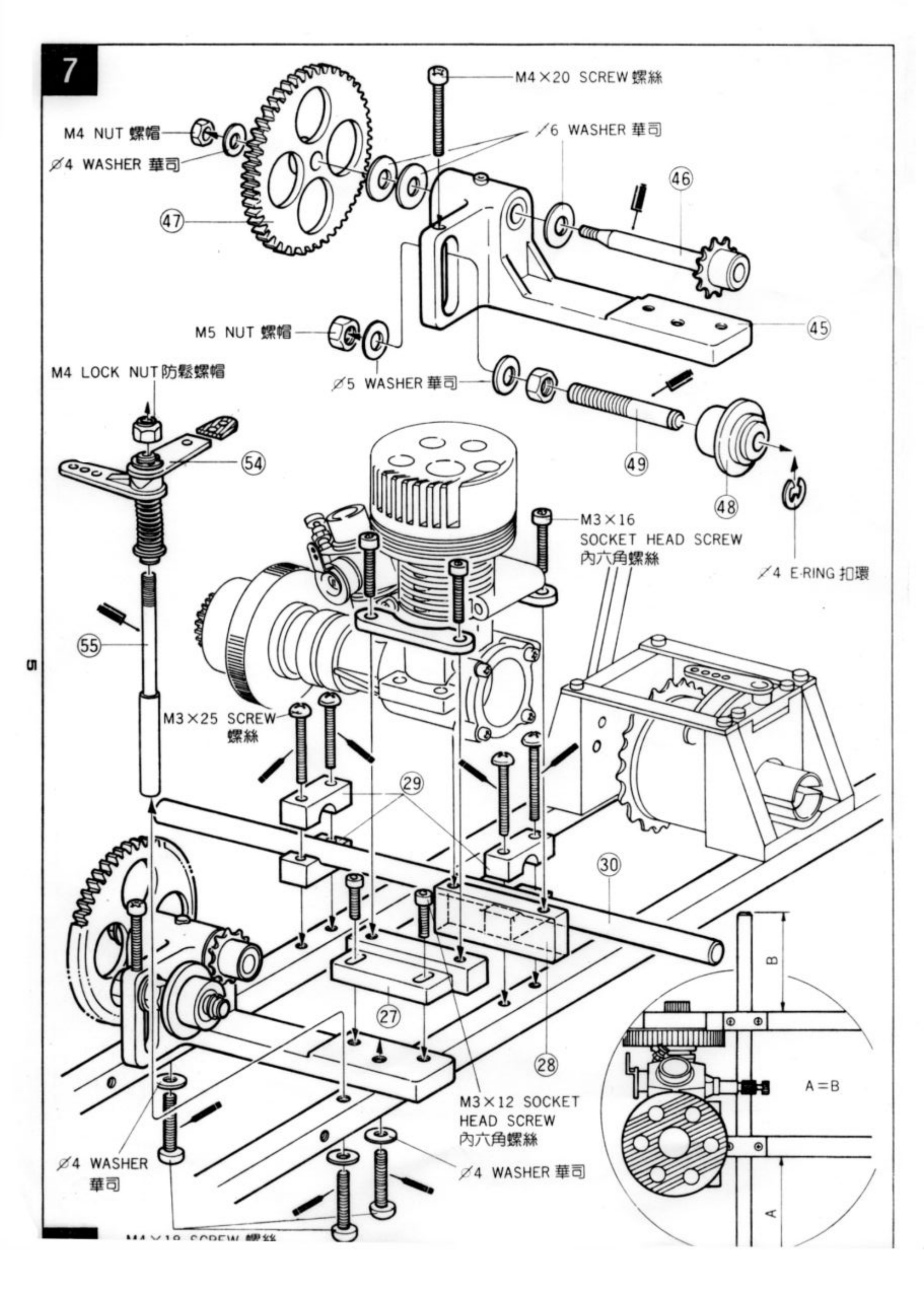
7
M4×20 SCREW 螺絲
M4 NUT 螺帽
⌀4 WASHER 華司
⌀6 WASHER 華司
46
47
45
M5 NUT 螺帽
⌀5 WASHER 華司
M4 LOCK NUT 防鬆螺帽
54
49
48
M3×16
SOCKET HEAD SCREW
內六角螺絲
⌀4 E-RING 扣環
55
M3×25 SCREW
螺絲
29
30
27
28
M3×12 SOCKET
HEAD SCREW
內六角螺絲
⌀4 WASHER
華司
⌀4 WASHER 華司
B
A=B
A

9

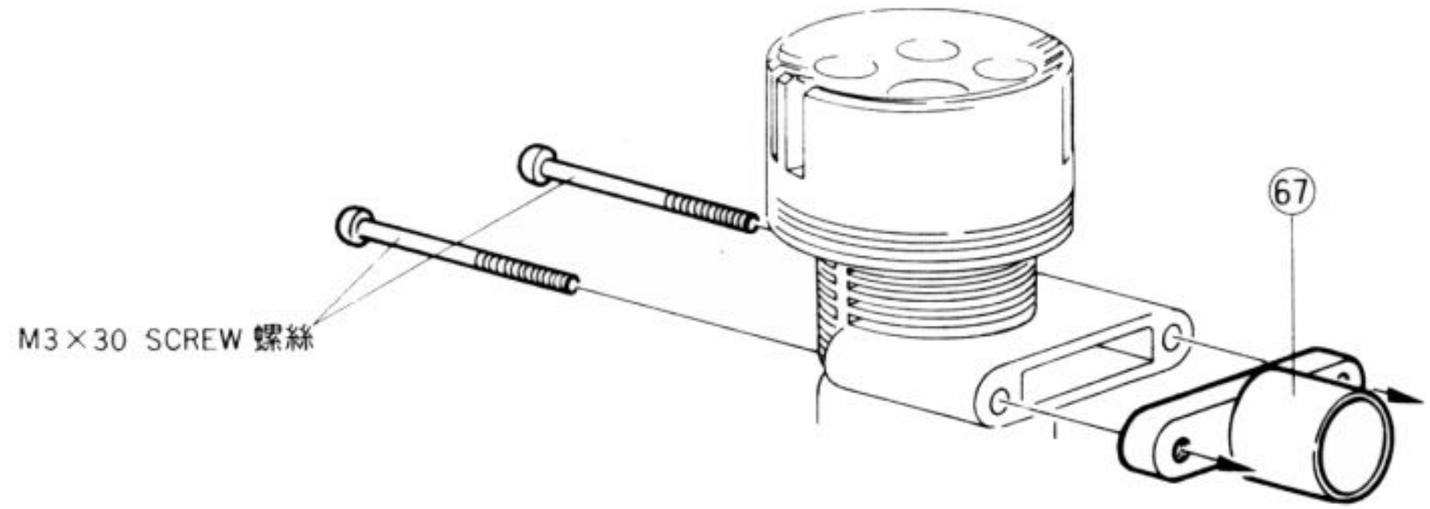
M3×30 SCREW 螺絲
67

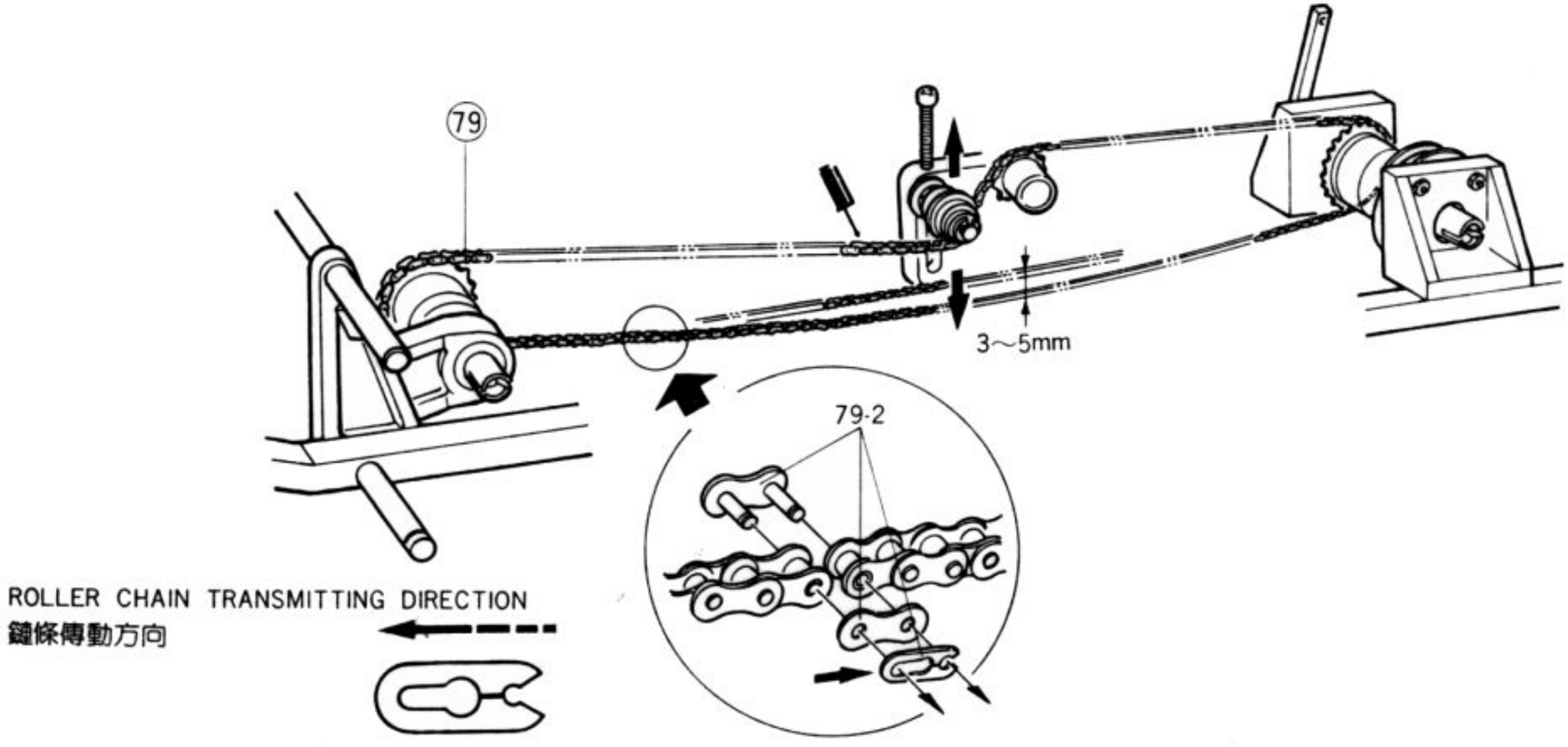
79
3～5mm
79-2
ROLLER CHAIN TRANSMITTING DIRECTION
鏈條傳動方向

10

11

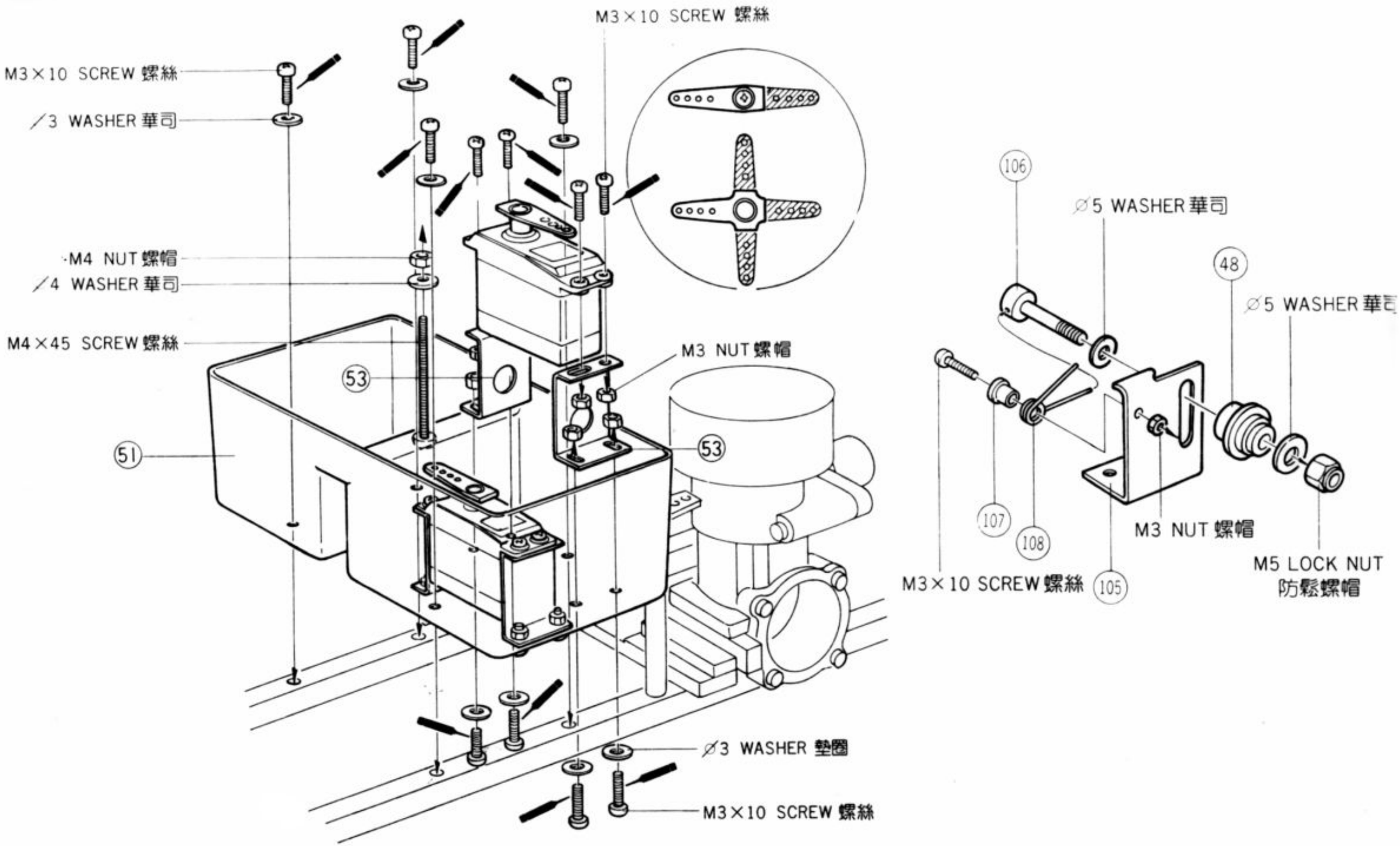
M3×10 SCREW 螺絲
M3×10 SCREW 螺絲
⌀3 WASHER 華司
M4 NUT 螺帽
⌀4 WASHER 華司
M4×45 SCREW 螺絲
53
51
M3 NUT 螺帽
53
⌀3 WASHER 墊圈
M3×10 SCREW 螺絲
106
⌀5 WASHER 華司
48
⌀5 WASHER 華司
107
108
M3 NUT 螺帽
M3×10 SCREW 螺絲
105
M5 LOCK NUT
防鬆螺帽

12

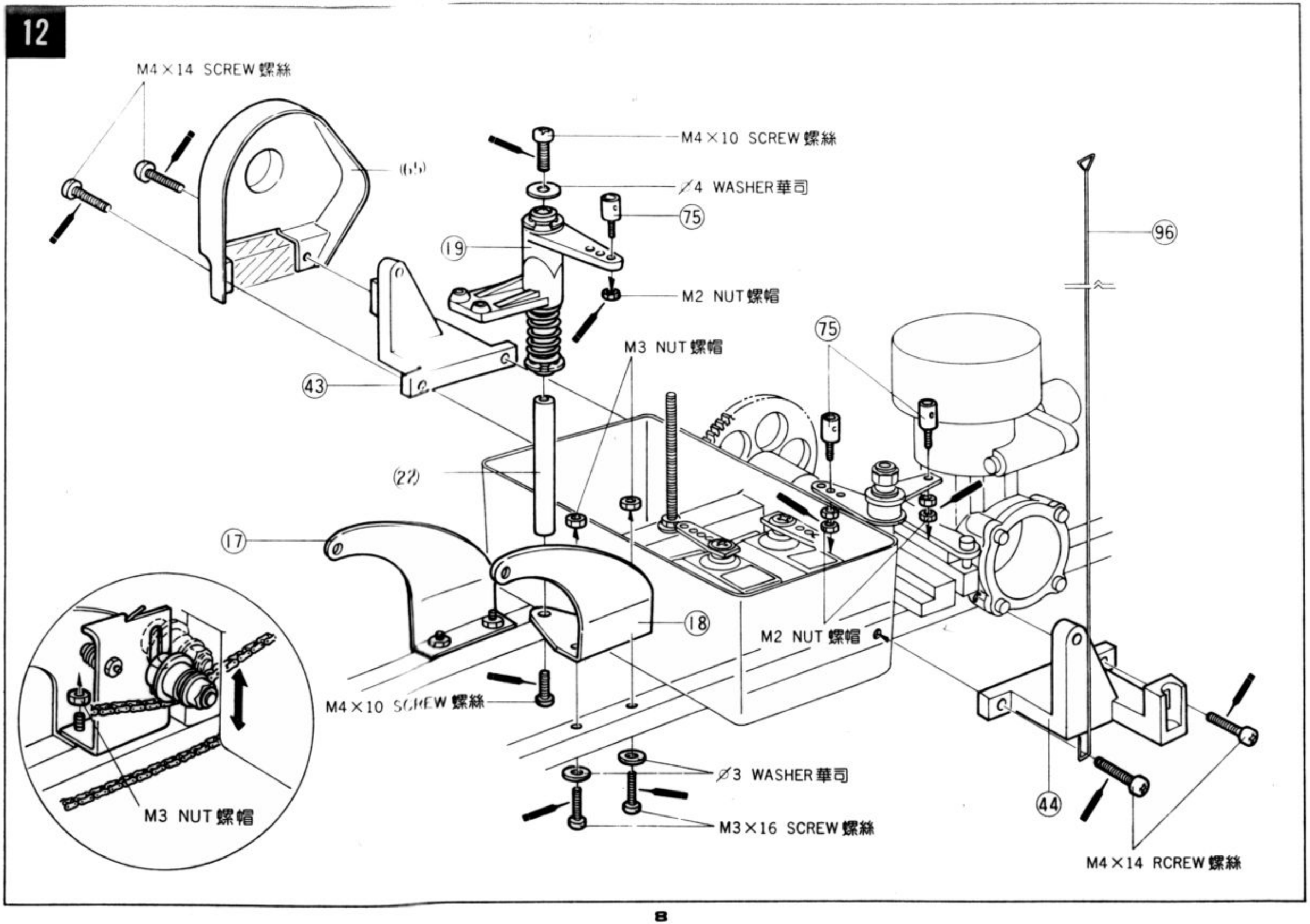
M4×14 SCREW螺絲
M4×10 SCREW螺絲
⌀4 WASHER華司
75
19
96
M2 NUT螺帽
75
M3 NUT螺帽
43
22
17
18
M2 NUT螺帽
M4×10 SCREW螺絲
⌀3 WASHER華司
M3×16 SCREW螺絲
44
M4×14 RCREW螺絲
M3 NUT螺帽

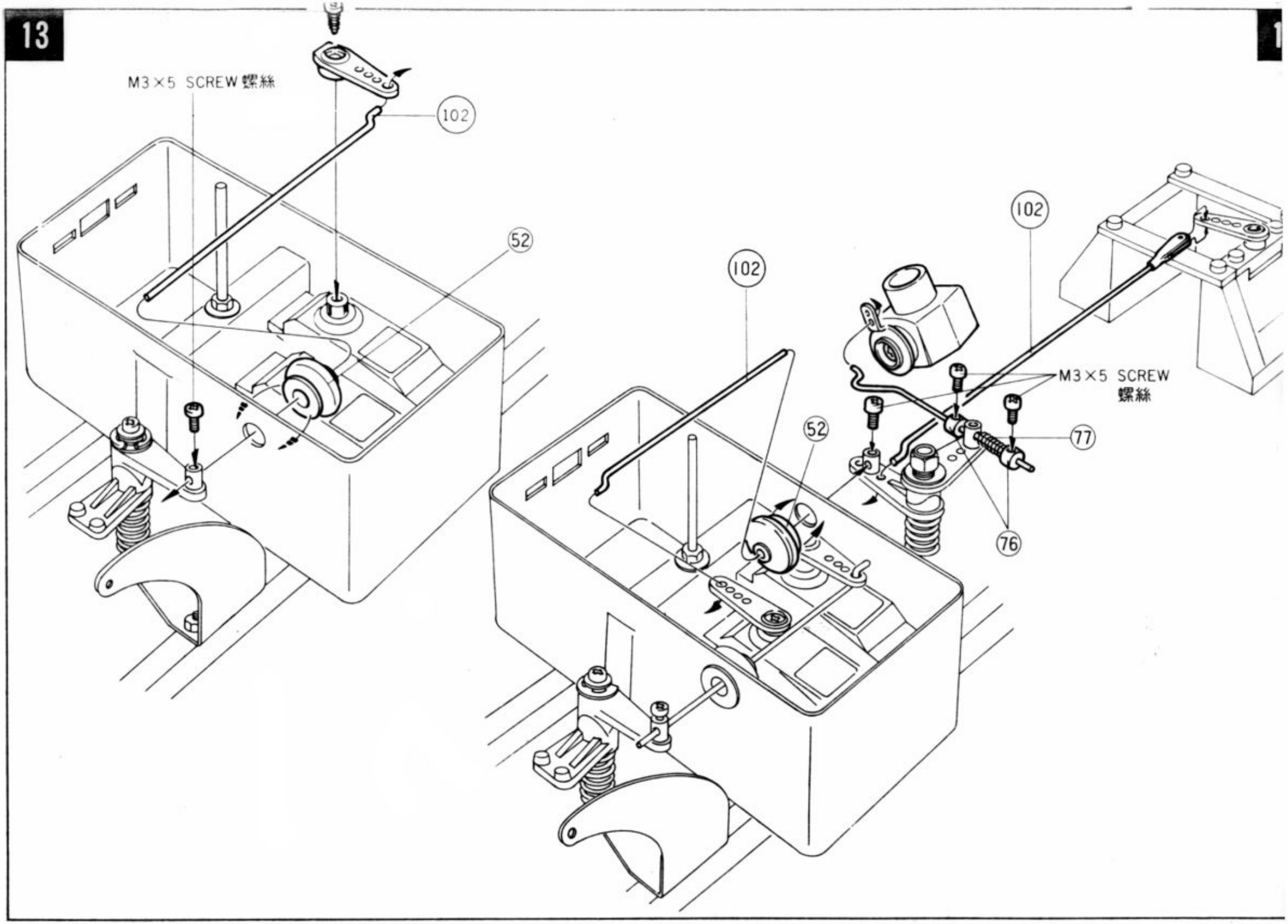
M3×5 SCREW 螺絲
102
52
102
52
102
M3×5 SCREW
螺絲
77
76

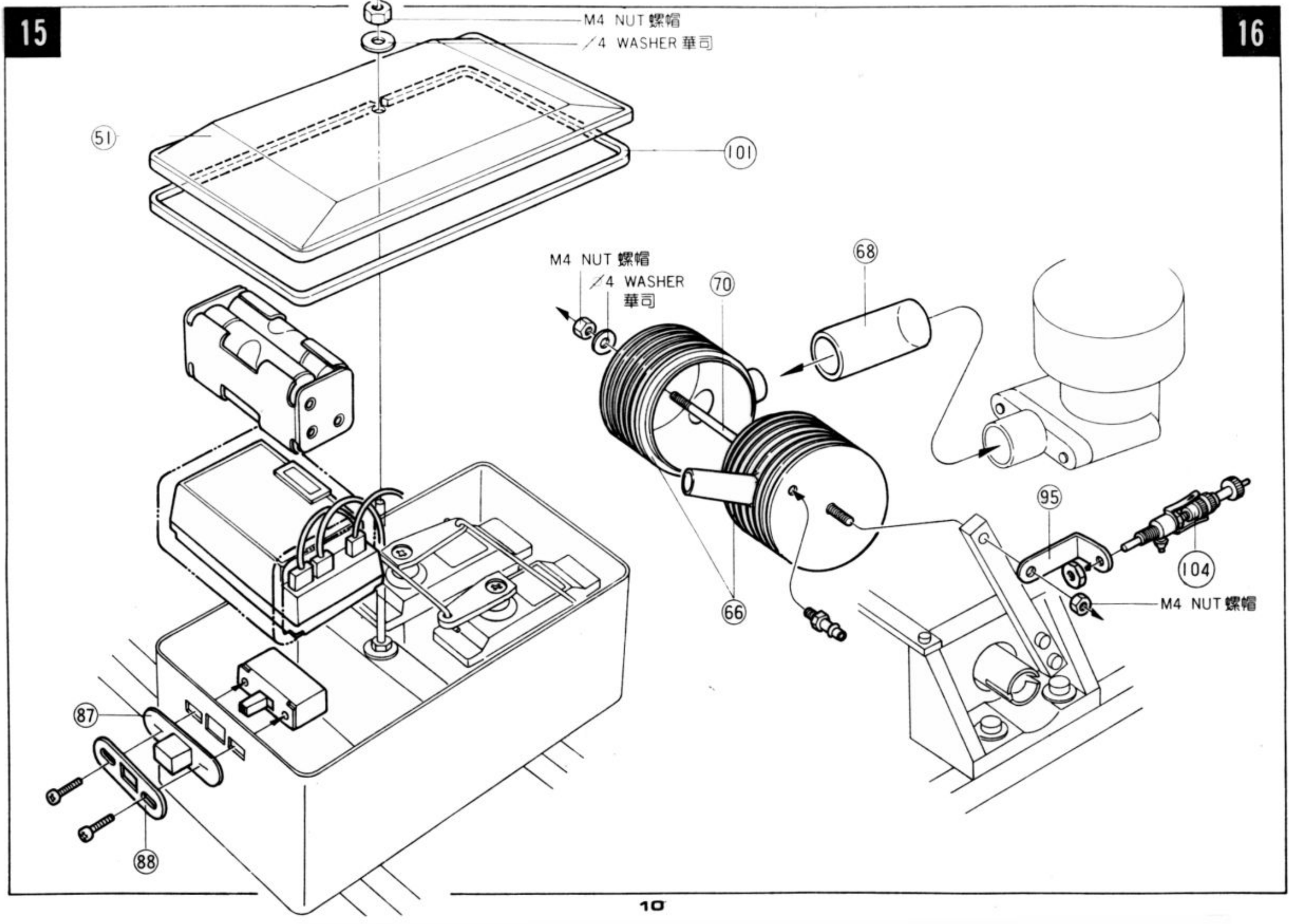
M4 NUT 螺帽
⁄4 WASHER 華司
51
101
M4 NUT 螺帽
⁄4 WASHER
華司
70
68
66
95
104
M4 NUT 螺帽
87
88

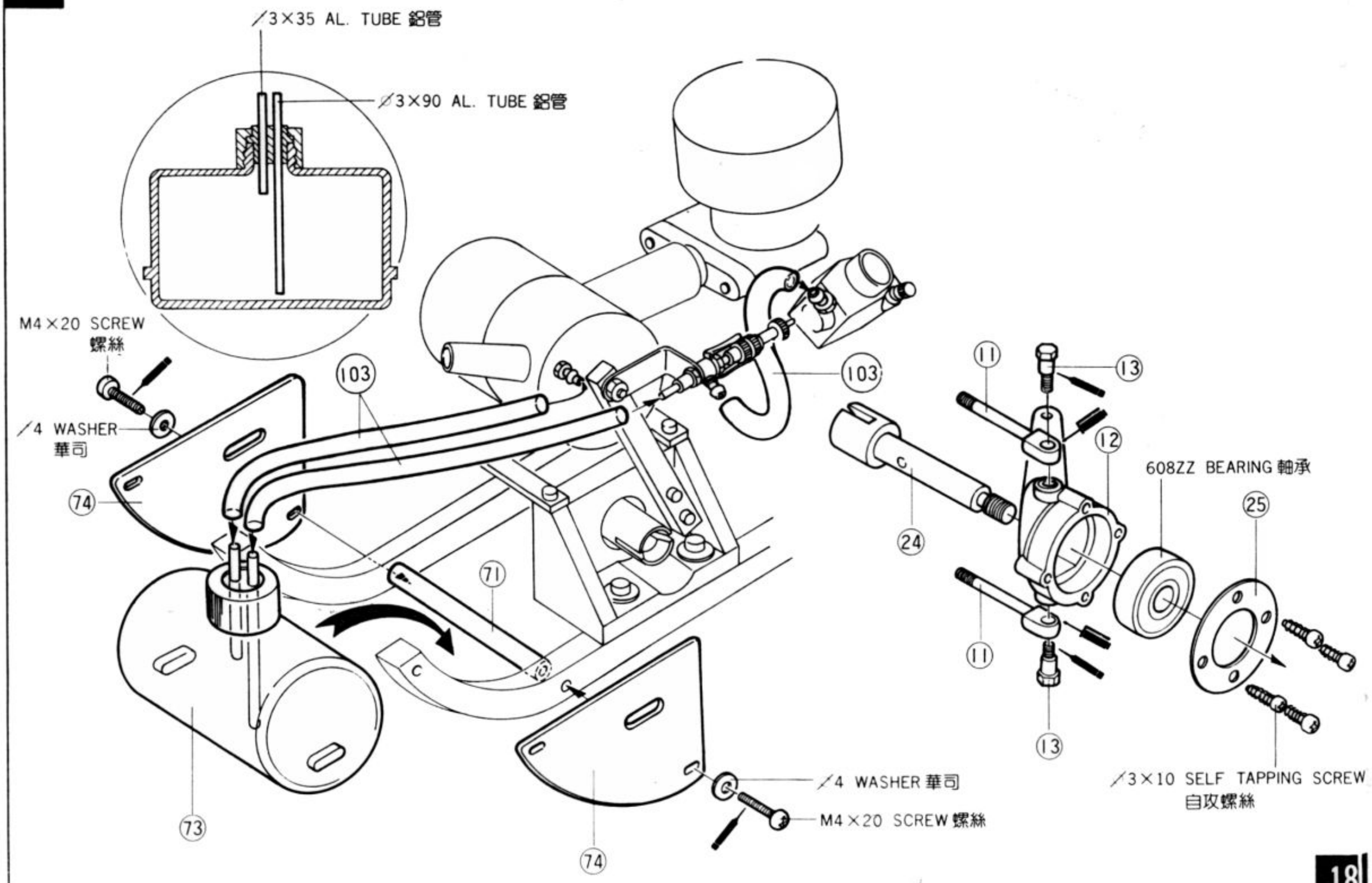
⌀3×35 AL. TUBE 鋁管
⌀3×90 AL. TUBE 鋁管
M4×20 SCREW
螺絲
⌀4 WASHER
華司
103
103
74
71
73
74
⌀4 WASHER 華司
M4×20 SCREW 螺絲
11
13
12
24
608ZZ BEARING 軸承
25
11
13
⌀3×10 SELF TAPPING SCREW
自攻螺絲

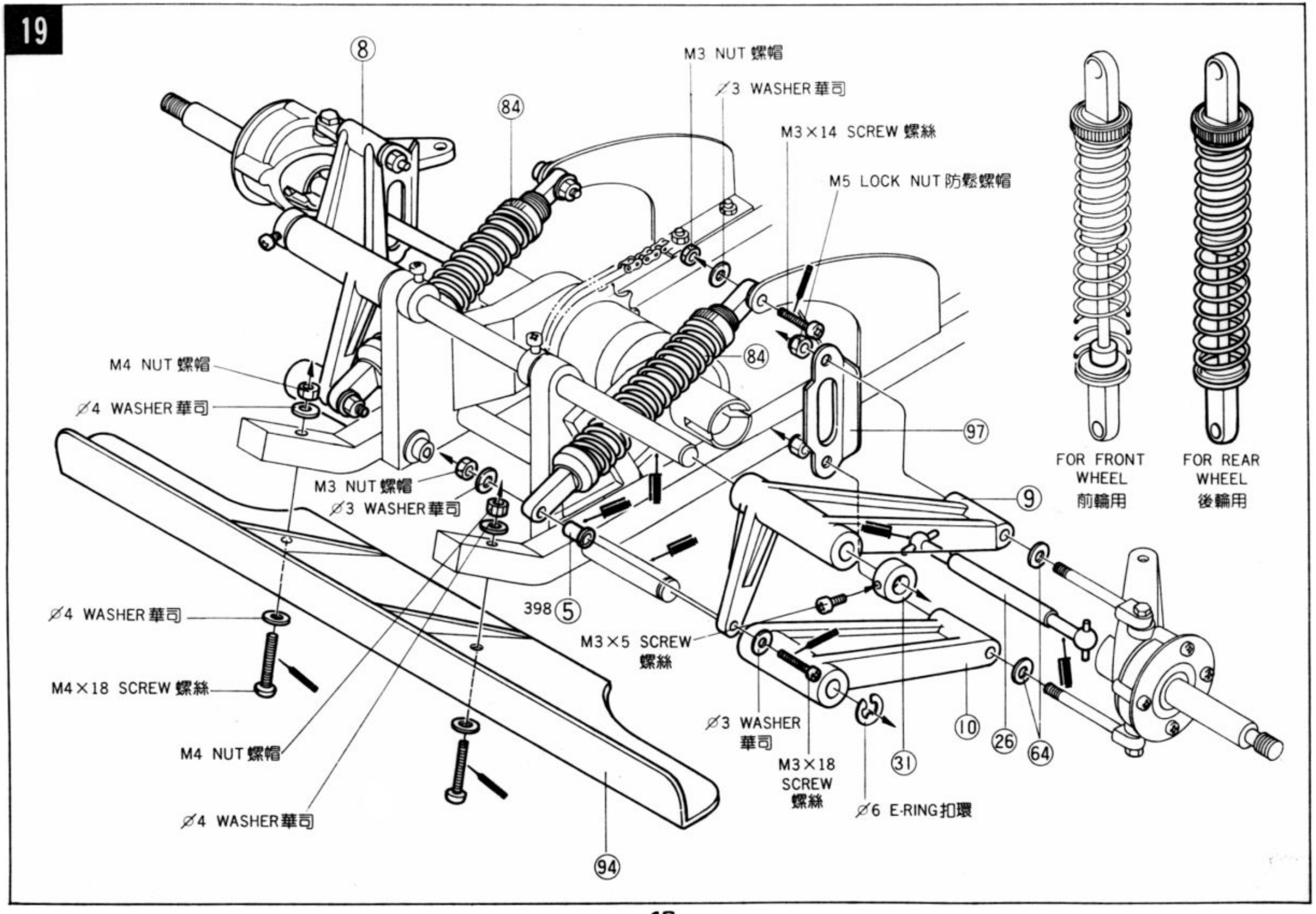
⑧
⑧④
M3 NUT 螺帽
⌀3 WASHER華司
M3×14 SCREW 螺絲
M5 LOCK NUT 防鬆螺帽
⑧④
⑨⑦
M4 NUT 螺帽
⌀4 WASHER華司
M3 NUT 螺帽
⌀3 WASHER華司
⌀4 WASHER華司
M4×18 SCREW 螺絲
M4 NUT 螺帽
⌀4 WASHER華司
⑨④
398⑤
M3×5 SCREW
螺絲
⌀3 WASHER
華司
M3×18
SCREW
螺絲
⌀6 E-RING扣環
③①
①⓪
②⑥
⑥④
⑨
FOR FRONT
WHEEL
前輪用
FOR REAR
WHEEL
後輪用

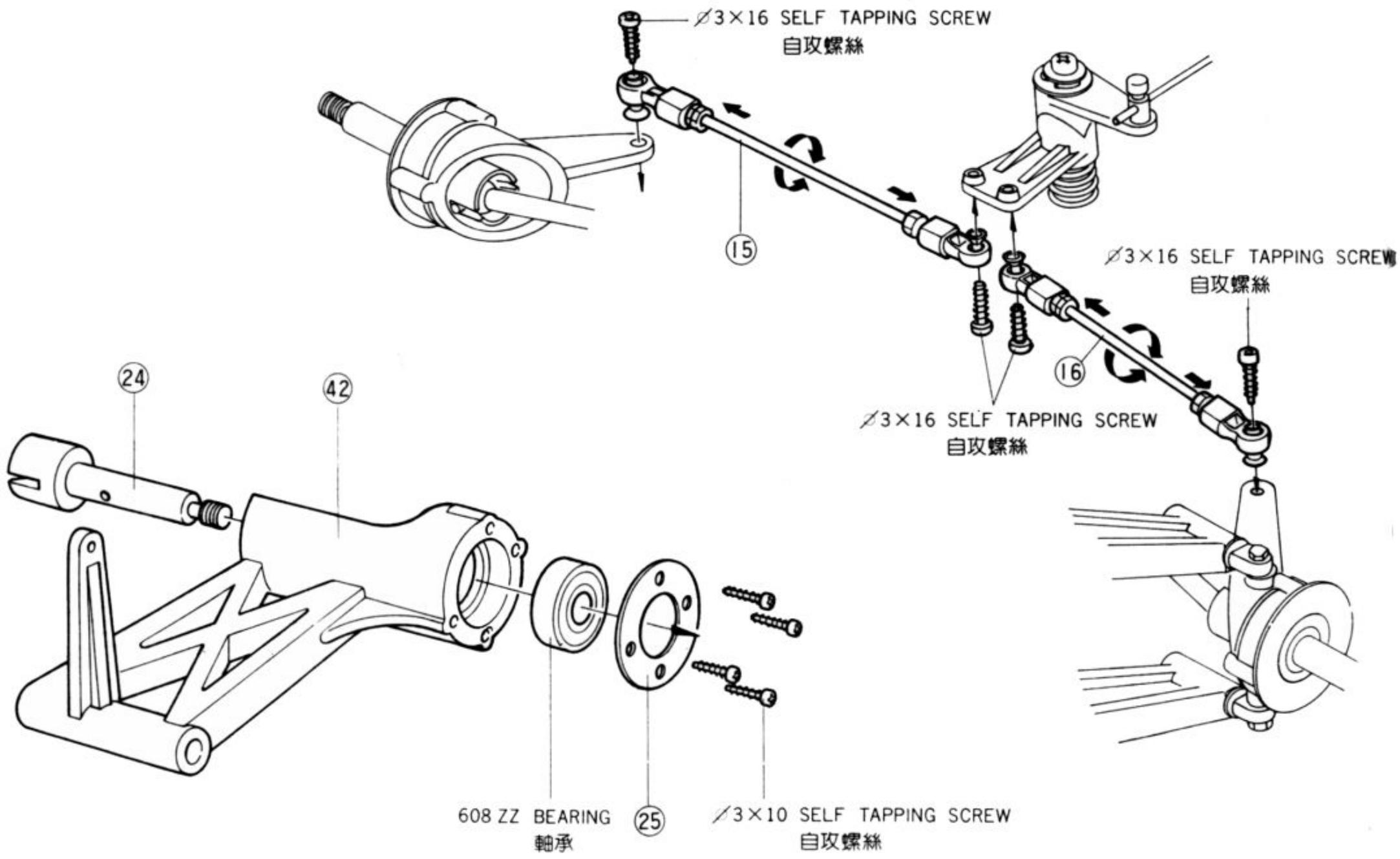
∅3×16 SELF TAPPING SCREW
自攻螺絲
⑮
∅3×16 SELF TAPPING SCREW
自攻螺絲
⑯
∅3×16 SELF TAPPING SCREW
自攻螺絲
㉔
㊷
608 ZZ BEARING
軸承
㉕
∕3×10 SELF TAPPING SCREW
自攻螺絲

22

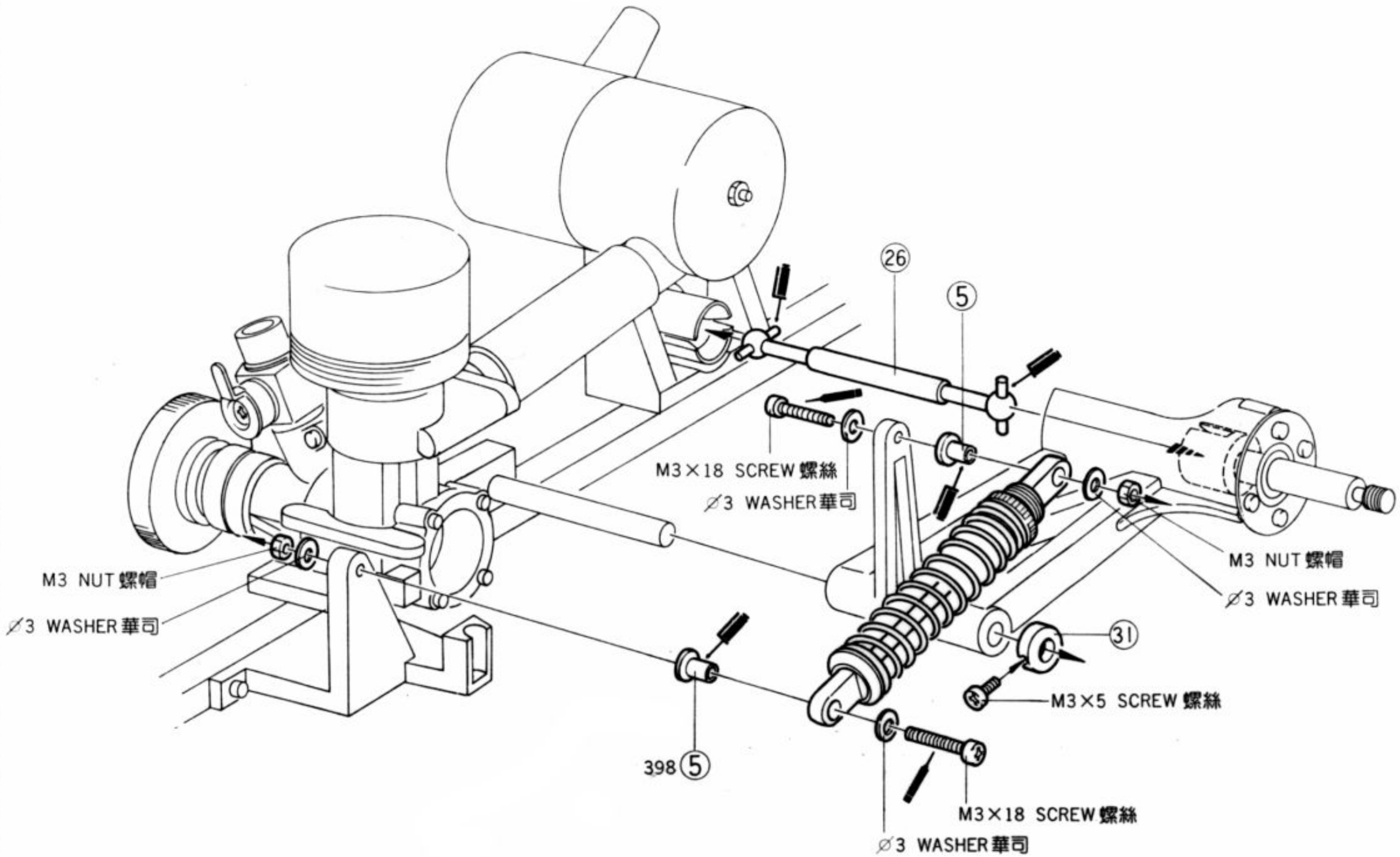
26
5
M3×18 SCREW 螺絲
⌀3 WASHER 華司
M3 NUT 螺帽
⌀3 WASHER 華司
M3 NUT 螺帽
⌀3 WASHER 華司
31
M3×5 SCREW 螺絲
398 5
M3×18 SCREW 螺絲
⌀3 WASHER 華司

23

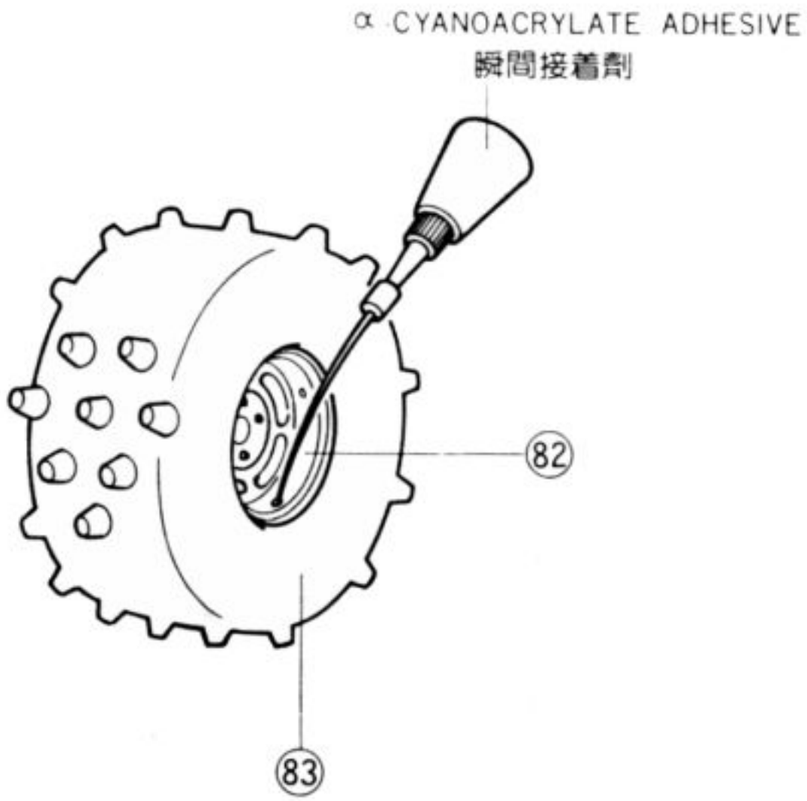
α CYANOACRYLATE ADHESIVE
瞬間接着劑
82
83

25

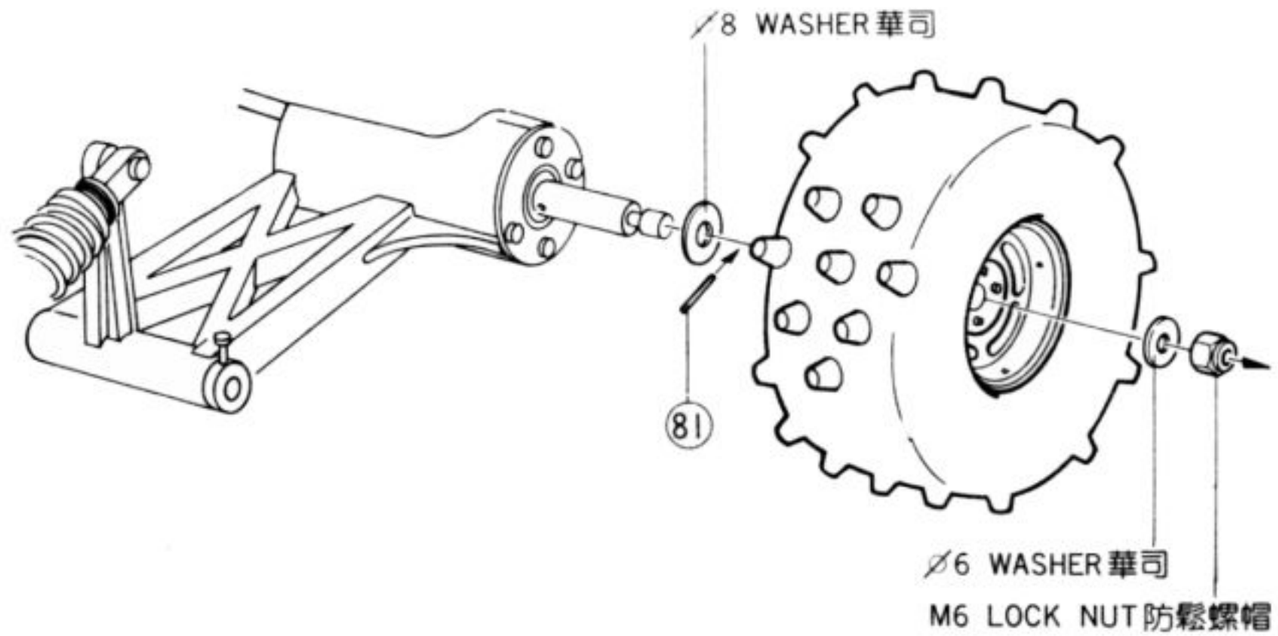
∅8 WASHER華司
81
∅6 WASHER華司
M6 LOCK NUT防鬆螺帽

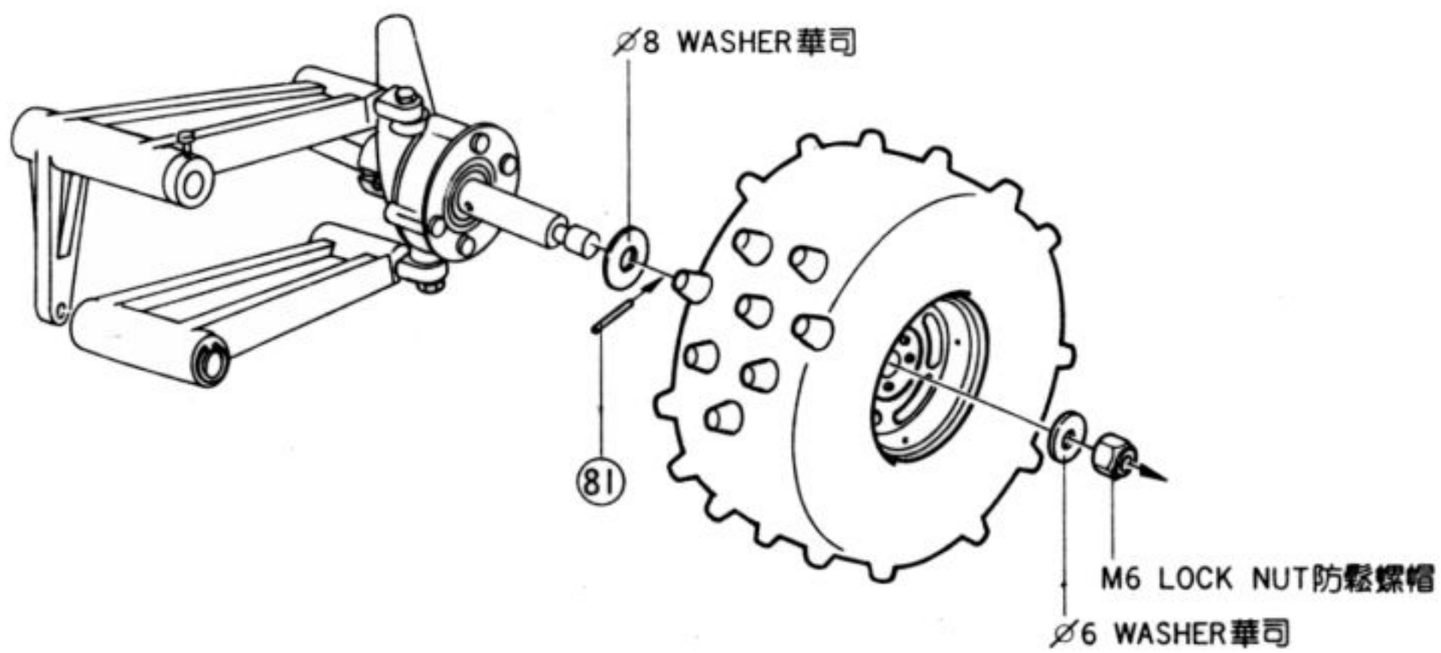
∅8 WASHER華司
81
M6 LOCK NUT防鬆螺帽
∅6 WASHER華司

24

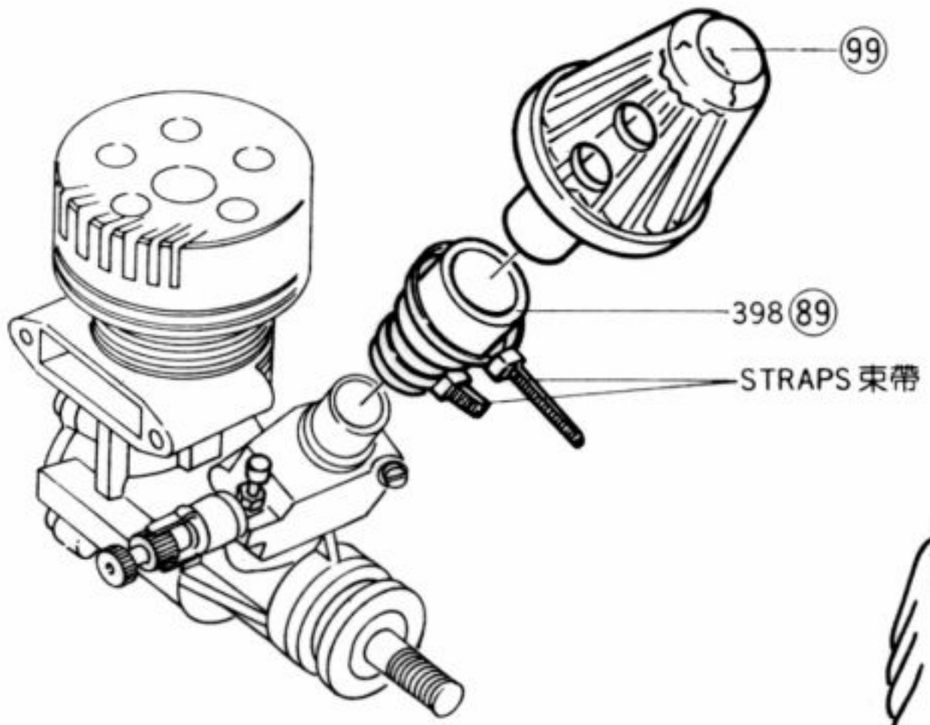

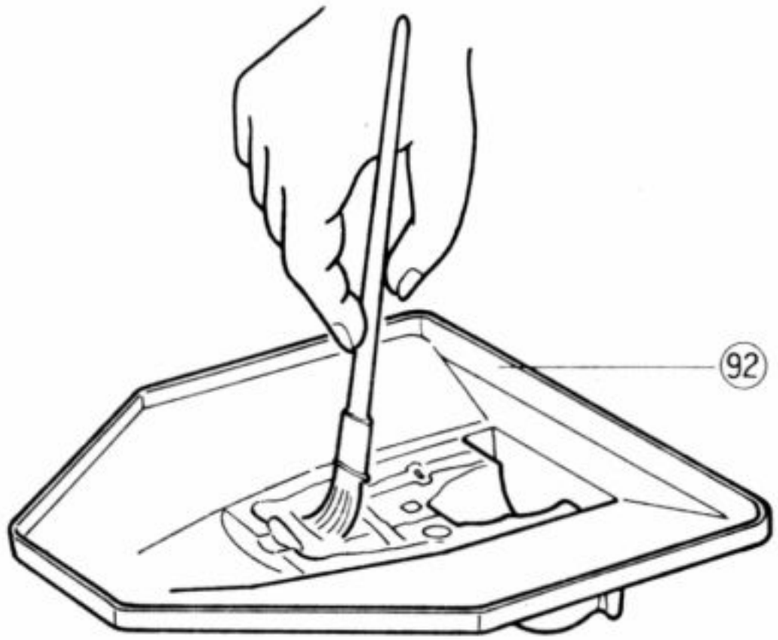

● PAINT THE FRAME AND DRIVER WITH FAVORITE COLOR
在車架及駕駛員內側漆上您喜愛的顏色。

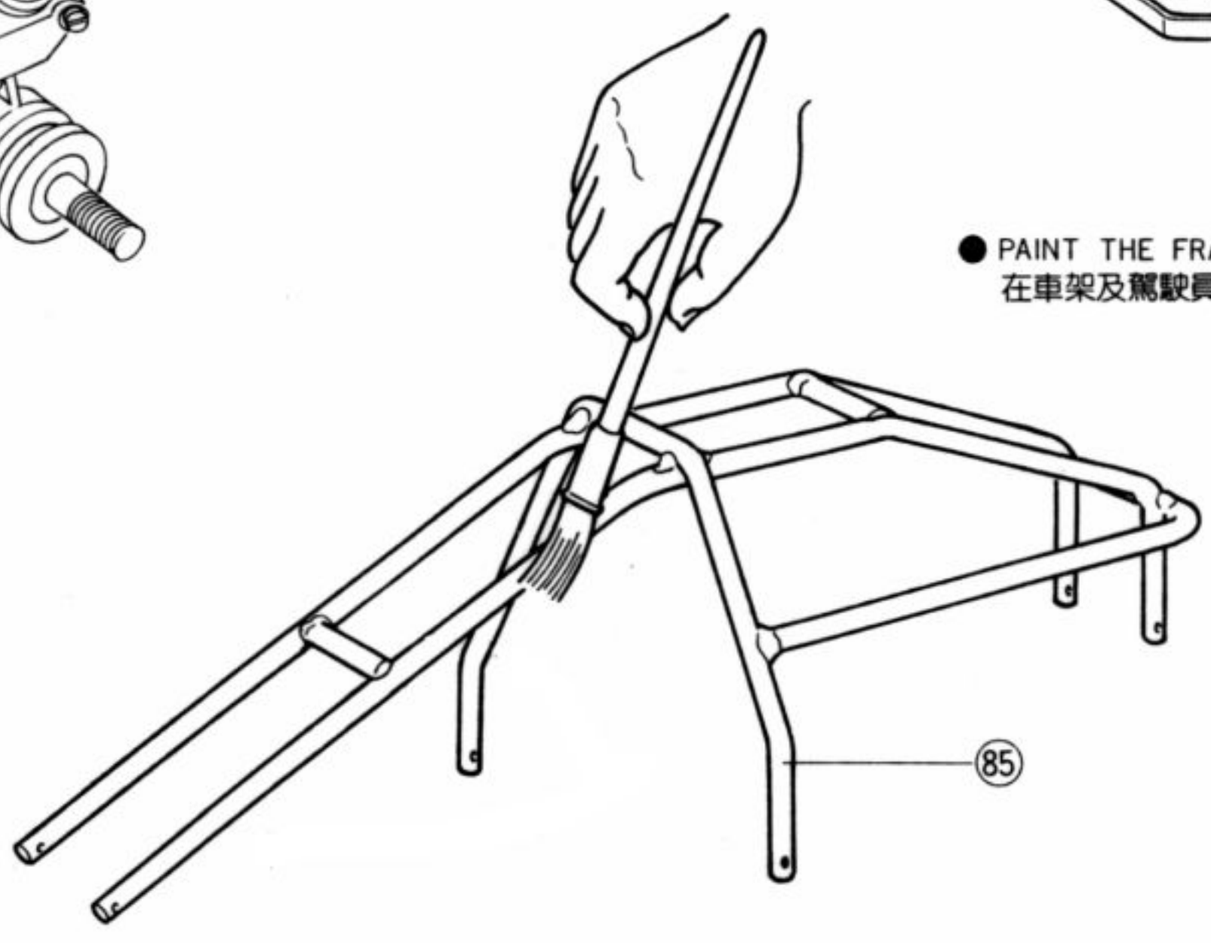

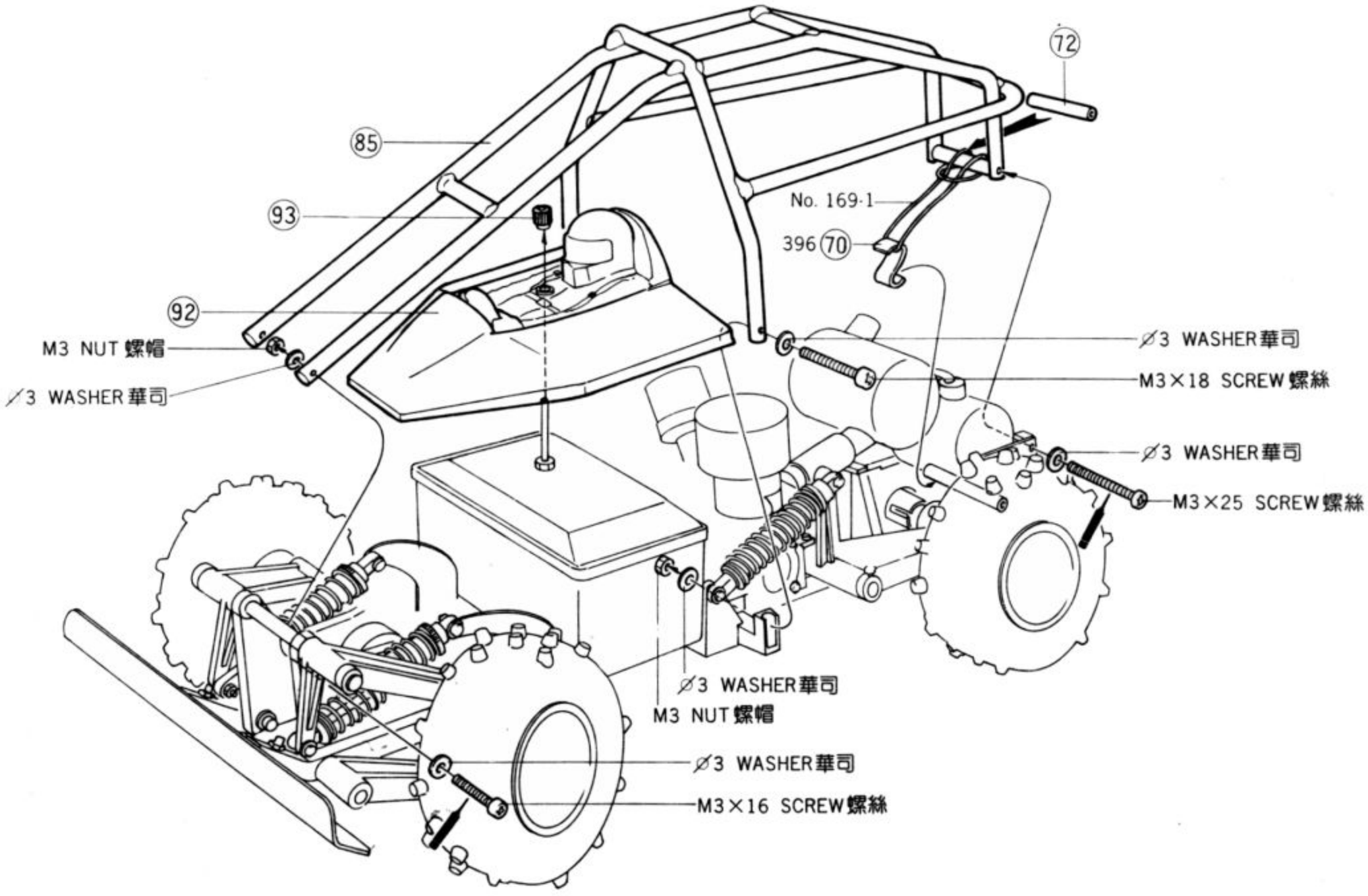
72
85
93
No. 169-1
396 70
92
M3 NUT 螺帽
⌀3 WASHER華司
⌀3 WASHER華司
M3×18 SCREW螺絲
⌀3 WASHER華司
M3×25 SCREW螺絲
⌀3 WASHER華司
M3 NUT 螺帽
⌀3 WASHER華司
M3×16 SCREW螺絲

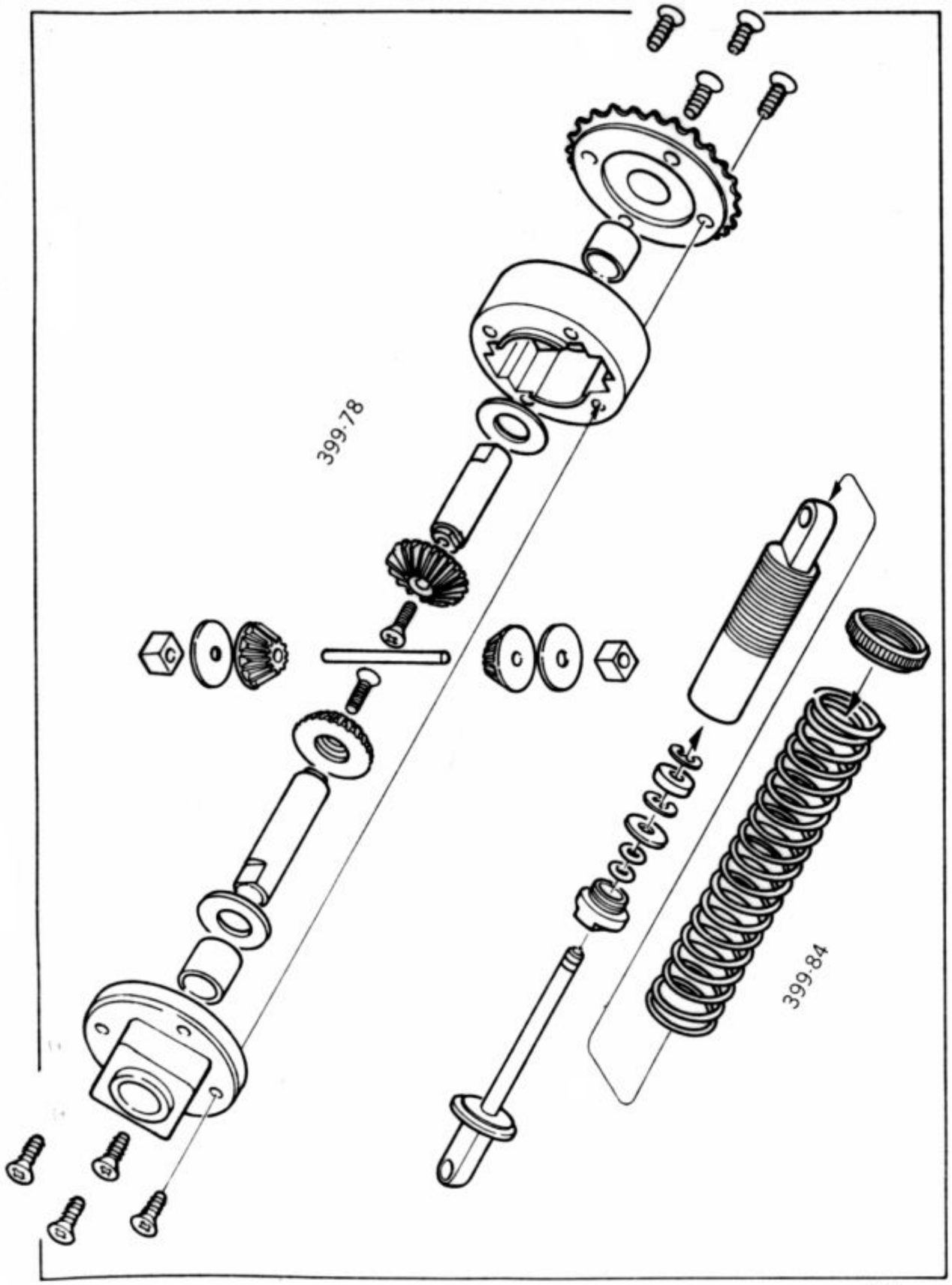

編號 ITEM NO.	品名	DESIGNATION	數量 Q'TY
399-1	大樑	CHASSIS	2
〃 -2	前輪臂固定架(右)	FRONT AXLE SUPPORT (R)	1
〃 -3	前輪臂固定架(左)	FRONT AXLE SUPPORT (L)	1
〃 -4	前車架固定桿	FRONT CROSS BAR	1
〃 -5	固定銅套	BUSHING	8
〃 -6	前輪臂支柱(短)	FRONT ARM PIVOT (S)	2
〃 -7	前輪臂支柱(長)	FRONT ARM PIVOT (L)	1
〃 -8	前輪臂(右上)	FRONT ARM (UPPER, RIGHT)	1
〃 -9	前輪臂(左上)	FRONT ARM (UPPER, LEFT)	1
〃 -10	前輪臂(下)	FRONT ARM (LOWER)	2
〃 -11	轉向座固定梢	KNUCKLE COUPLING PIN	4
〃 -12	前輪轉向座	STEERING KNUCKLE	2
〃 -13	大王梢	KING PIN	4
〃 -14	球形連桿頭	BALL LINK	4
〃 -15	前繫桿(長)	TIE ROD (L)	1
〃 -16	前繫桿(短)	TIE ROD (S)	1
〃 -17	避震器固定座(右)	OIL DAMPER BRACKET (R)	1
〃 -18	避震器固定座(左)	OIL DAMPER BRACKET (L)	1
〃 -19	轉向曲柄組	STEERING CRANK SET	1
〃 -22	轉向曲柄軸	STEERING CRANK POST	1
〃 -23	萬向節	UNIVERSAL JOINT	4
〃 -24	輪軸	AXLE	4
〃 -25	軸承壓板	BEARING RETAINER	4
〃 -26	傳動軸	DRIVE AXLE	4
〃 -27	引擎座滑動端	ENGINE MOUNT SLIDING SIDE	1
〃 -28	引擎座固定端	ENGINE MOUNT FIXED SIDE	1
〃 -29	後輪臂固定座	PIVOT CLAMP	3
〃 -30	後輪臂支柱	REAR ARM PIVOT	1
〃 -31	軸環	COLLAR	4
〃 -32	後軸承座(右)	REAR AXLE BEARING BLOCK (R)	1
〃 -33	後軸承座(左)	REAR AXLE BEARING BLOCK (L)	1
〃 -34	軸承座連接桿	BEARING BLOCK JOINER	2
〃 -35	剎車壓片導桿	BRAKE SHOE GUIDE	2
〃 -36	剎車壓片	BRAKE SHOE	2
〃 -37	凸輪	CAM	1

編號 ITEM NO.	品名	DESIGNATION	數量 Q'TY
399-38	凸輪壓片	CAM RETAINER	1
〃 39	剎車控制片	BRAKE ARM	1
〃 40	剎車盤	BRAKE DISC	1
〃 41	後輪臂(右)	REAR ARM (R)	1
〃 42	後輪臂(左)	REAR ARM (L)	1
〃 43	車架固定座(右)	FRAME SUPPORT (R)	1
〃 44	車架固定座(左)	FRAME SUPPORT (L)	1
〃 45	齒輪座	TRANSVERSE MOUNT	1
〃 46	小鏈輪	DRIVE SPROCKET	1
〃 47	從動正齒輪	DRIVEN GEAR	1
〃 48	惰輪	IDLE WHEEL	1
〃 49	惰輪軸	IDLE WHEEL SHAFT	1
〃 50	引擎壓板	ENGINE CLAMP	2
〃 51	無線電保護盒	RADIO BOX	1
〃 52	連桿防水套	PUSH ROD SEAL	2
〃 53	伺服器固定座	SERVO MOUNT	4
〃 54	絞盤	STEERING PULLER	1
〃 55	絞盤支柱	STEERING PULLER POST	1
〃 56	飛輪	FLY WHEEL	1
〃 57	離合器墊片	CLUTCH BACK-UP WASHER	1
〃 58	引擎中心螺帽	ENGINE CENTER NUT	2
〃 59	離合器	CLUTCH	2
〃 60	離合器彈簧	CLUTCH SPRING.	2
〃 61	來令片	LINING	1
〃 62	離合器罩	CLUTCH BELL	1
〃 63	滾針軸承	NEEDLE BEARING	1
〃 64	墊片	WASHER	1
〃 65	齒輪護蓋	GEAR COVER	1
〃 66	消音器	MUFFLER	1
〃 67	消音器接頭	HEADER	1
〃 68	消音器連接管	SILICONE TUBE	1
〃 69	消音器固定桿	MUFFLER SUPPORT	1
〃 70	消音器螺桿	MUFFLER STUD	1
〃 71	長橫桿	CROSS BAR (L)	1
〃 72	短橫桿	CROSS BAR (S)	1

編號 ITEM NO.	品名	DESIGNATION	數量 Q'TY
399-73	油箱	FUEL TANK	1
〃 -74	油箱固定片	FUEL TANK HOLDER	2
〃 -75	連桿固定座	PUSH ROD CONNECTOR	3
〃 -76	連桿軸環	PUSH ROD COLLAR	2
〃 -77	連桿彈簧	OVER-RIDE SPRING	1
〃 -78	差速器	DIFFERENTIAL GEAR BOX	2
〃 -79	鏈條	ROLLER CHAIN	1
〃 -81	輪軸挿梢	AXLE PIN	4
〃 -82	輪骰	HUB	4
〃 -83	輪胎	TIRE	4
〃 -84	油壓避震器	OIL DAMPER	4
〃 -85	車架	FRAME	1
〃 -86	貼紙	STICKER	1
〃 -87	開關防水套	WATER PROOF COVER OF SWITCH	1
〃 -88	開關壓片	SWITCH FIX PLATE	1
〃 -92	駕駛員	DRIVER	1
〃 -93	駕駛員固定螺帽	DRIVER MOUNTING NUT	1
〃 -94	保險桿	BUMPER	1
〃 -95	油針托架	NEEDLE VALVE BRACKET	1
〃 -96	天線	ANTENNA	1
〃 -97	轉向止片	STEERING STOPPER	1
〃 -98	鏈條清除鈎	CHAIN SWEEPER	1
〃 -99	空器濾清器	AIR CLEANER SET	1
〃 -100	說明書	ASSEMBLY INSTRUCTION	1
〃 -101	保護盒防水條	RADIO BOX SEAL	1
〃 -102	可調式連動桿(鐵)	STEEL KWIK-LINK	3
〃 -103	耐熱油管	FUEL LINE	1
〃 -104	油針組	R/C NEEDLE VALVE SET	1
〃 -105	張力輪固定架	TENSION IDLE WHEEL BRACKET	1
〃 -106	張力惰輪軸	TENSION IDLE WHEEL SHAFT	1
〃 -107	彈簧固定座	SPRING HOLDER	1
〃 -108	張力輪彈簧	TENSION IDLE WHEEL SPRING	1
〃 -109	螺絲防鬆劑	ANAEROBIC ADHESIVE	1

THUNDER TIGER MODEL CO.

PRINTED IN TAIWAN R.O.C.

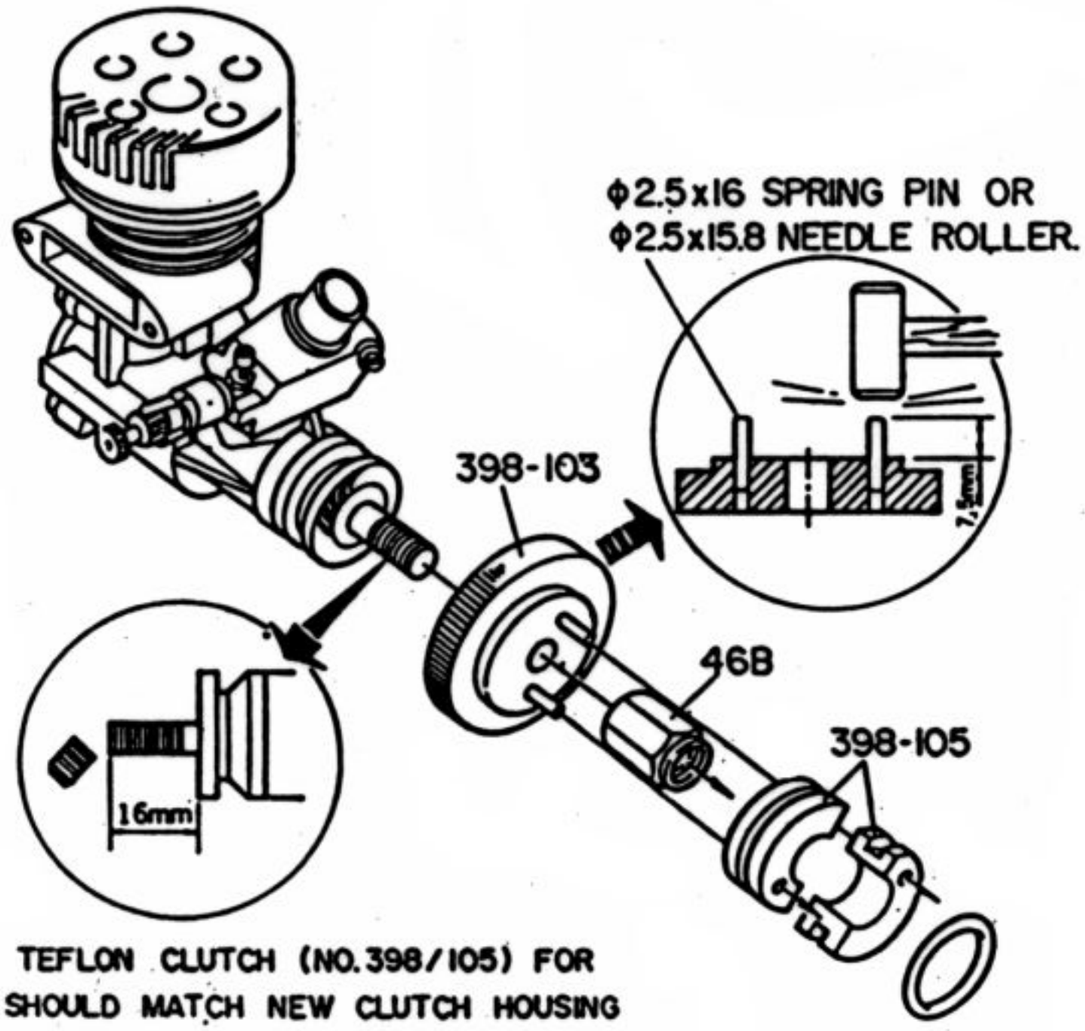

WE ARE USING NEW TEFLON CLUTCH (NO.398/105) FOR CHALLENGER. WHICH SHOULD MATCH NEW CLUTCH HOUSING COVER (NO.398/104) AND NEW DRIVE WHEEL (NO.398/103).